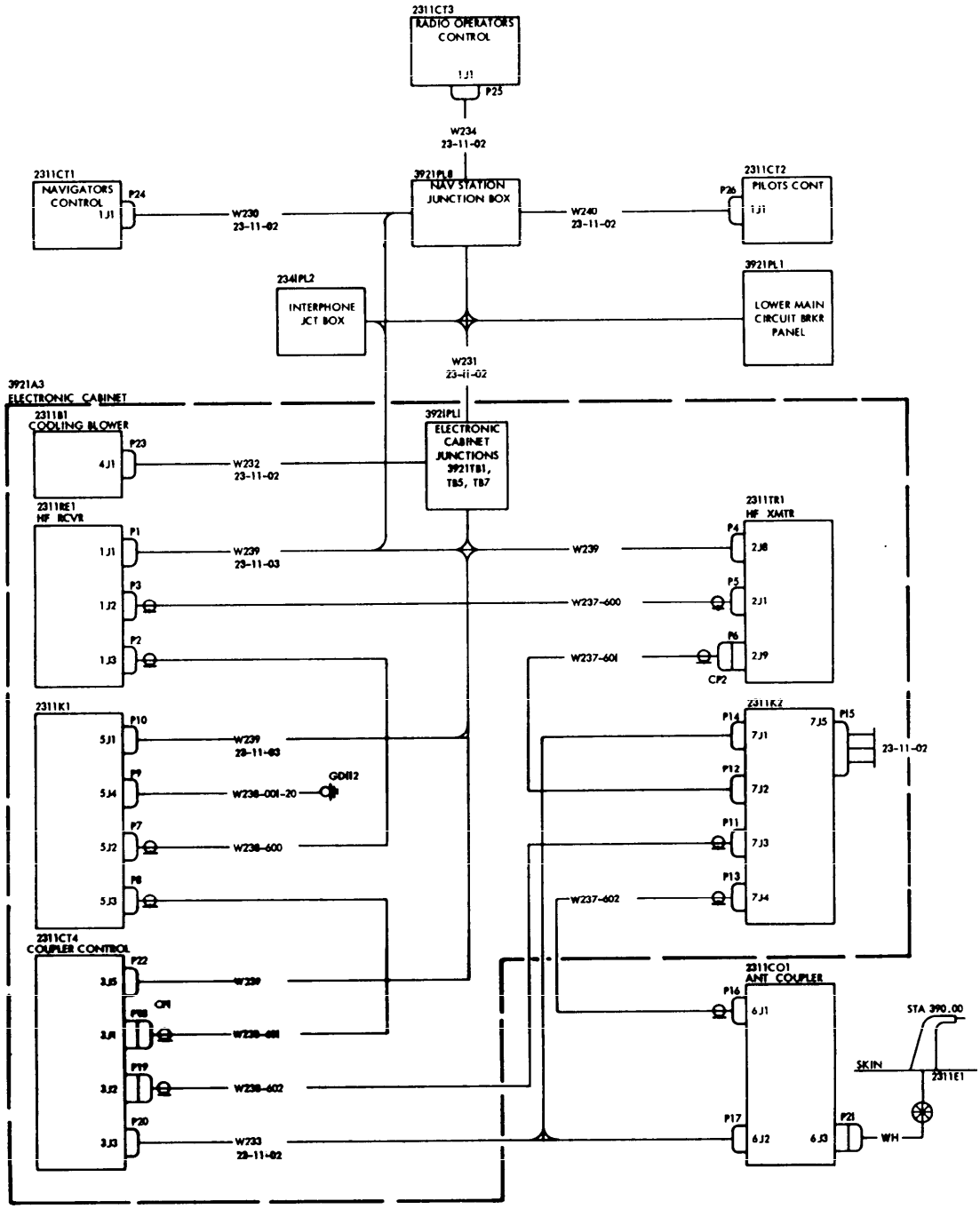

TITLE	MIL-STD	DRAWING NUMBER	REV	MODEL	FSCM NO.	PAGE
INTERCONNECT DIAGRAM– LIAISON RADIO NO.1 AN/ARC-000	AIRCRAFT COMPANY	555-00010	A	XC-555A	00000	11-23-11-01 CONFIG-001

FIGURE 14. BLOCK INTERCONNECTION DIAGRAM

THIS SAMPLE DRAWING IS INFORMATIONAL ONLY AND COMPLETE TO THE DEGREE NECESSARY TO ILLUSTRATE A TYPE OF DRAWING. ACTUAL FORMAT AND DRAWING SHALL CONFORM TO THE TEXTUAL REQUIREMENTS SET FORTH IN THIS STANDARD.

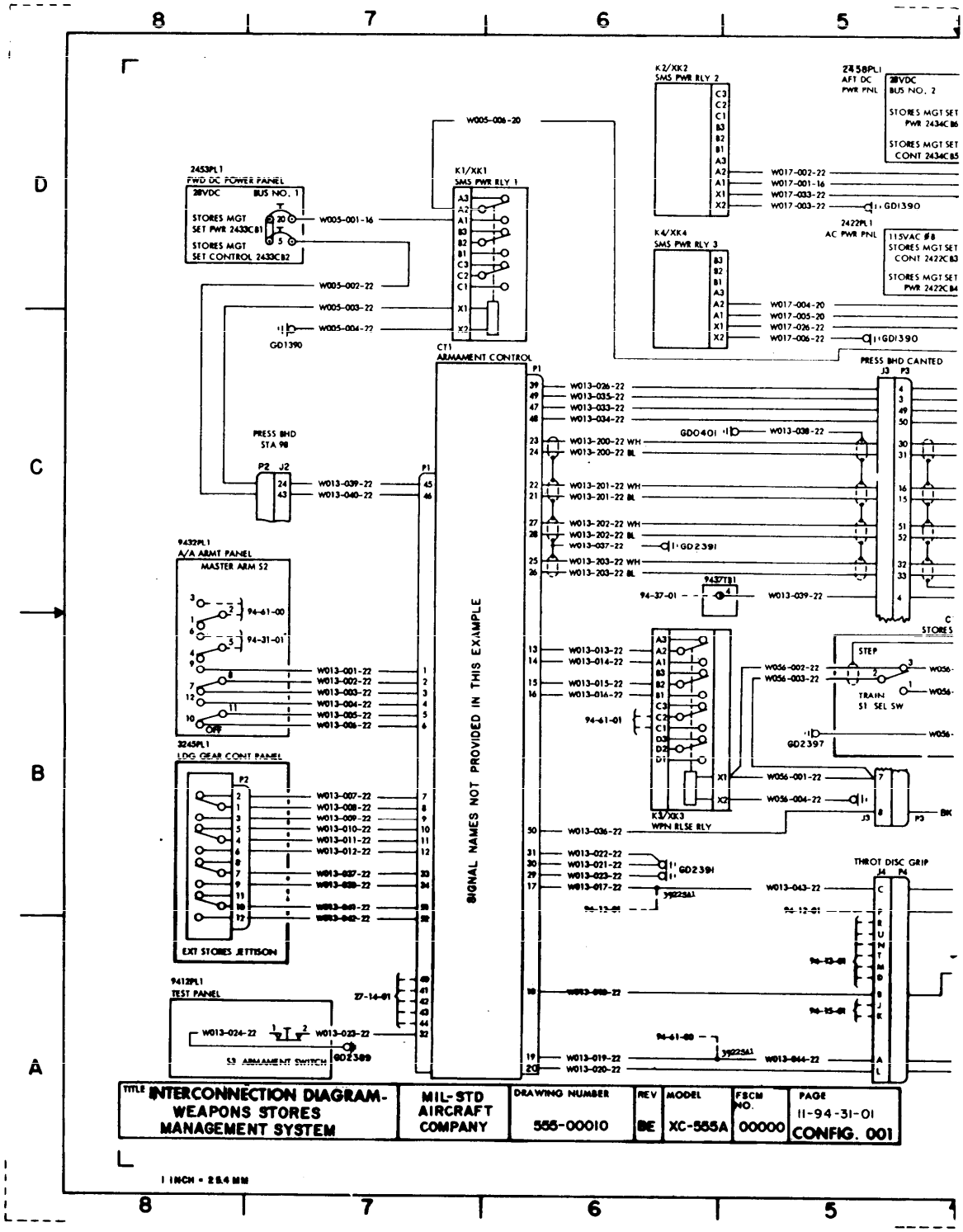

FIGURE 15. POINT TO POINT INTERCONNECTION DIAGRAM (SHEET 1 OF 2)

THIS SAMPLE DRAWING IS INFORMATIONAL ONLY AND COMPLETE TO THE DEGREE NECESSARY TO ILLUSTRATE A TYPE OF DRAWING. ACTUAL FORMAT AND DRAWING SHALL CONFORM TO THE TEXTUAL REQUIREMENTS SET FORTH IN THIS STANDARD.

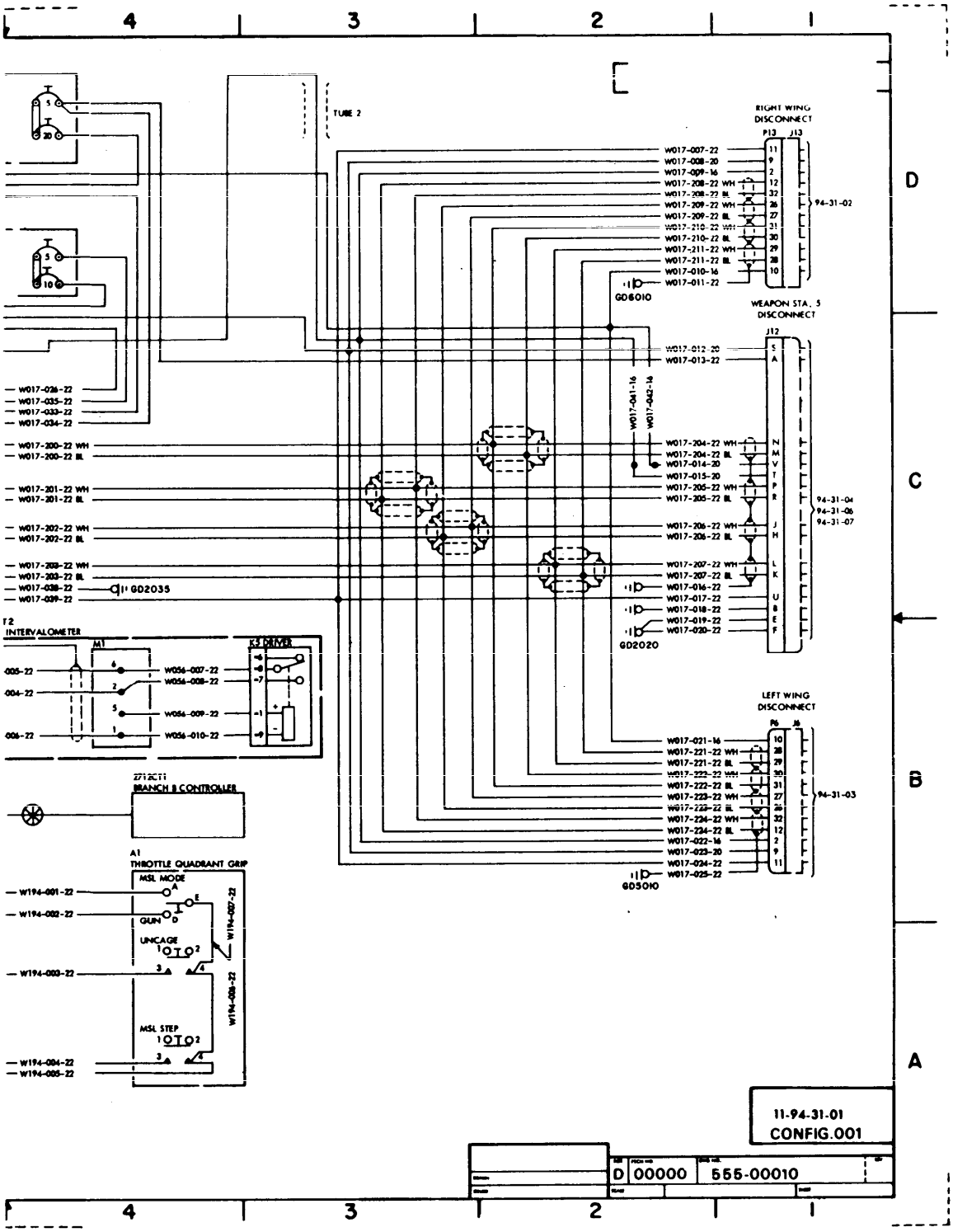

FIGURE 15. POINT TO POINT INTERCONNECTION DIAGRAM (SHEET 2 OF 2)

THIS SAMPLE DRAWING IS INFORMATIONAL ONLY AND COMPLETE TO THE DEGREE NECESSARY TO ILLUSTRATE A TYPE OF DRAWING. ACTUAL FORMAT AND DRAWING SHALL CONFORM TO THE TEXTUAL REQUIREMENTS SET FORTH IN THIS STANDARD.

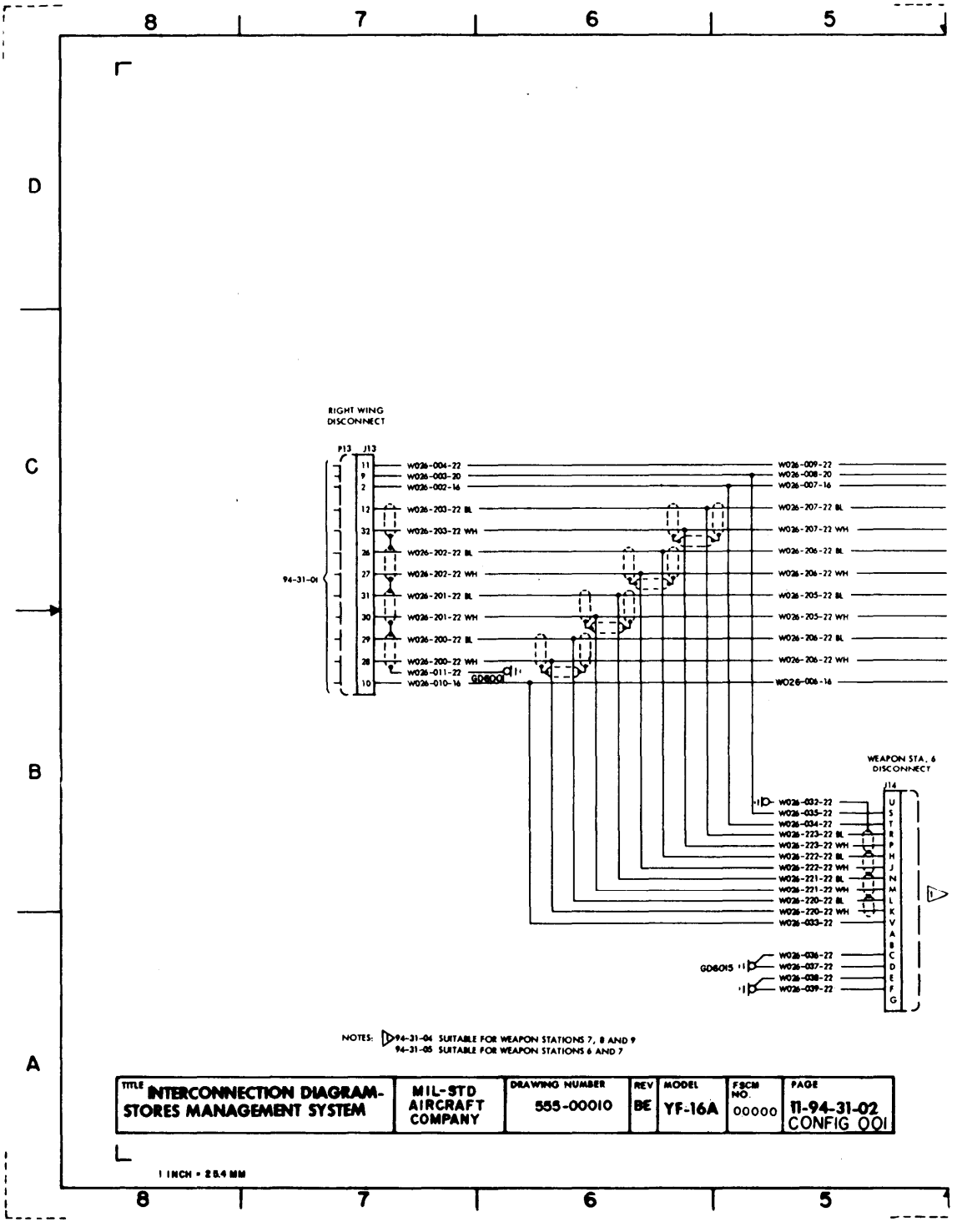

FIGURE 16. POINT TO POINT INTERCONNECTION DIAGRAM (SHEET 1 OF 2)

THIS SAMPLE DRAWING IS INFORMATIONAL ONLY AND COMPLETE TO THE DEGREE NECESSARY TO ILLUSTRATE A TYPE OF DRAWING. ACTUAL FORMAT AND DRAWING SHALL CONFORM TO THE TEXTUAL REQUIREMENTS SET FORTH IN THIS STANDARD.

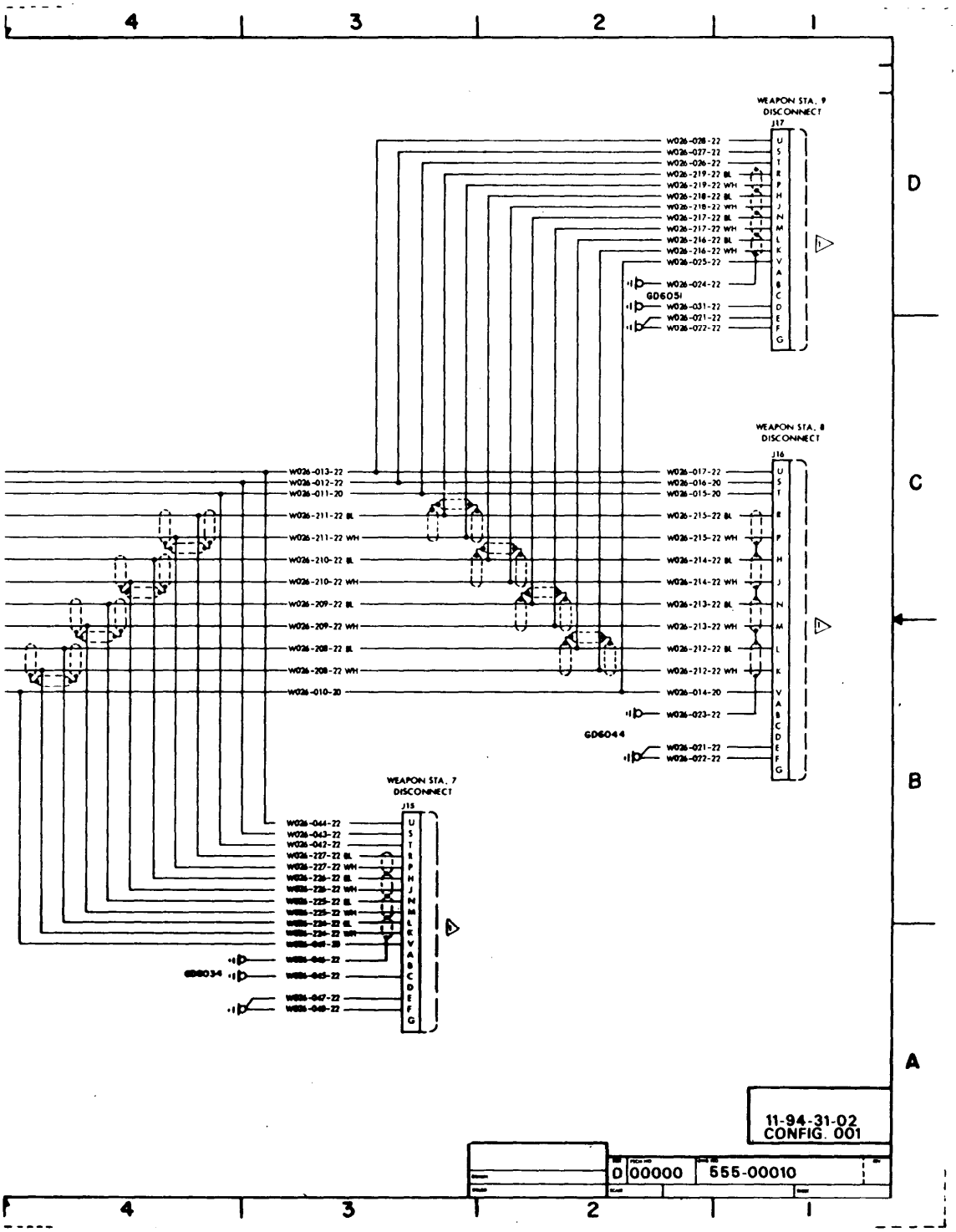

FIGURE 16. POINT TO POINT INTERCONNECTION DIAGRAM (SHEET 2 OF 2)

THIS SAMPLE DRAWING IS INFORMATIONAL ONLY AND COMPLETE TO THE DEGREE NECESSARY TO ILLUSTRATE A TYPE OF DRAWING. ACTUAL FORMAT AND DRAWING SHALL CONFORM TO THE TEXTUAL REQUIREMENTS SET FORTH IN THIS STANDARD.

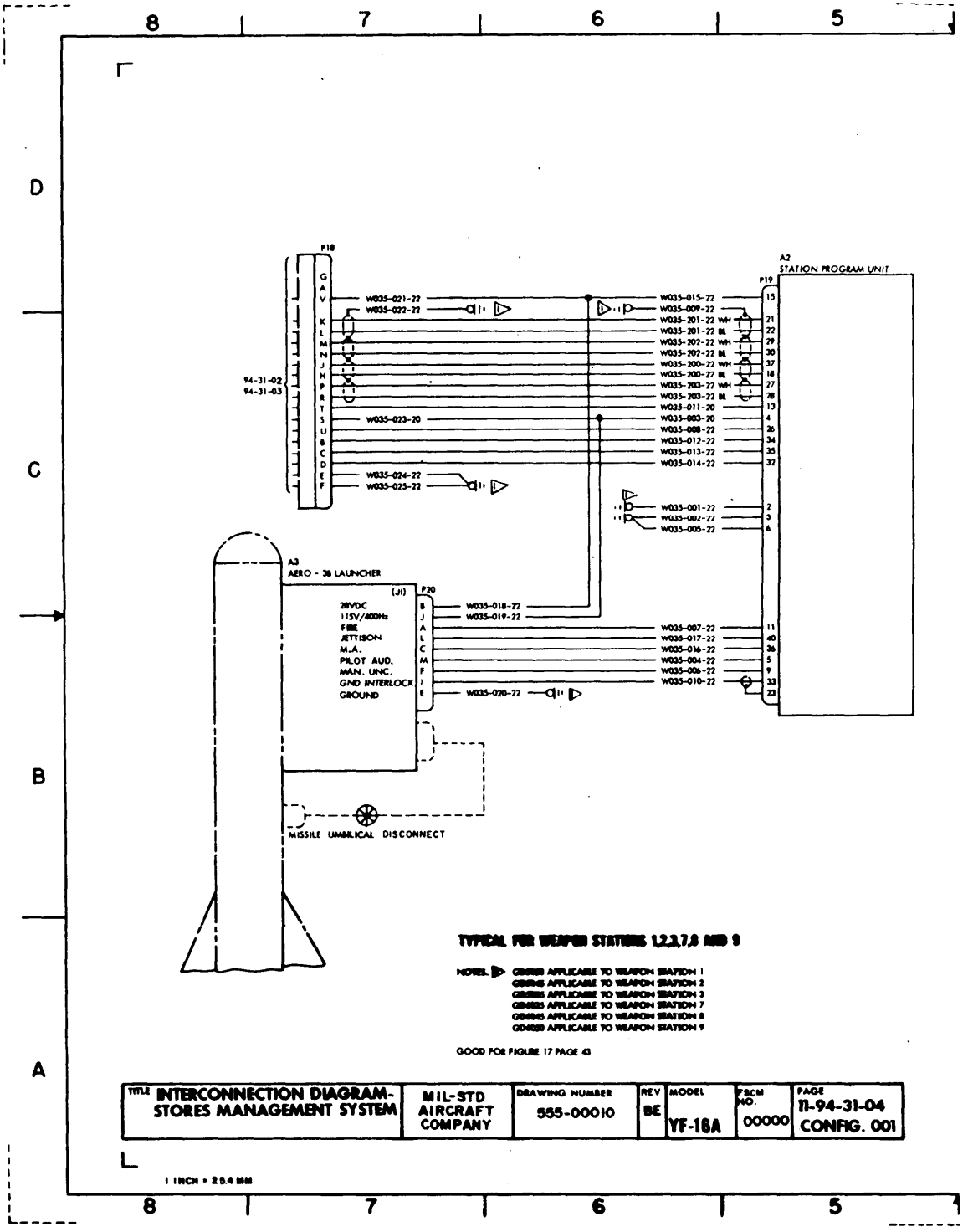

FIGURE 17. POINT TO POINT INTERCONNECTION DIAGRAM (SHEET 1 OF 2)

THIS SAMPLE DRAWING IS INFORMATIONAL ONLY AND COMPLETE TO THE DEGREE NECESSARY TO ILLUSTRATE A TYPE OF DRAWING. ACTUAL FORMAT AND DRAWING SHALL CONFORM TO THE TEXTUAL REQUIREMENTS SET FORTH IN THIS STANDARD.

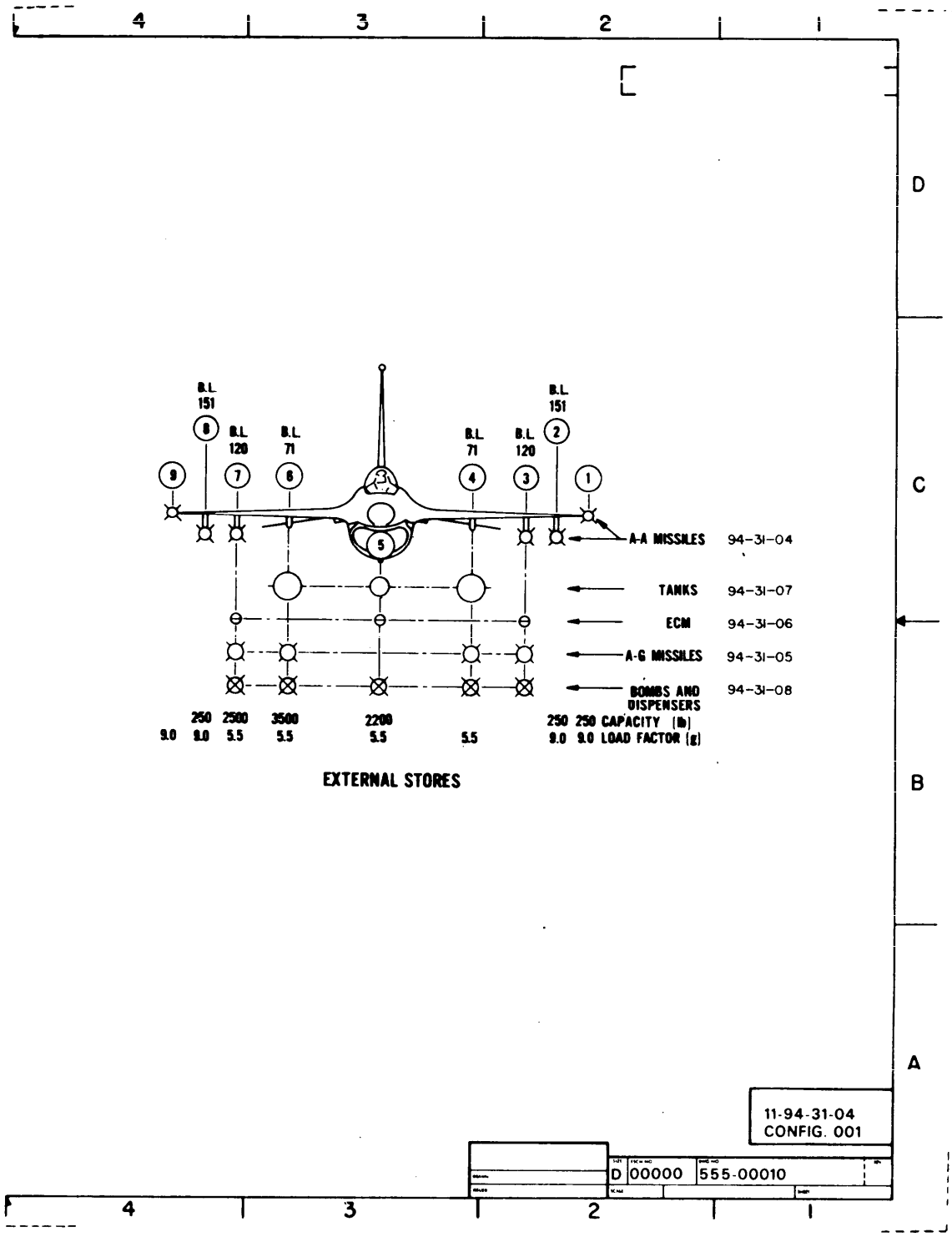

FIGURE 17. POINT TO POINT INTERCONNECTION DIAGRAM (SHEET 2 OF 2)

THIS SAMPLE DRAWING IS INFORMATIONAL ONLY AND COMPLETE TO THE DEGREE NECESSARY TO ILLUSTRATE A TYPE OF DRAWING. ACTUAL FORMAT AND DRAWING SHALL CONFORM TO THE TEXTUAL REQUIREMENTS SET FORTH IN THIS STANDARD.

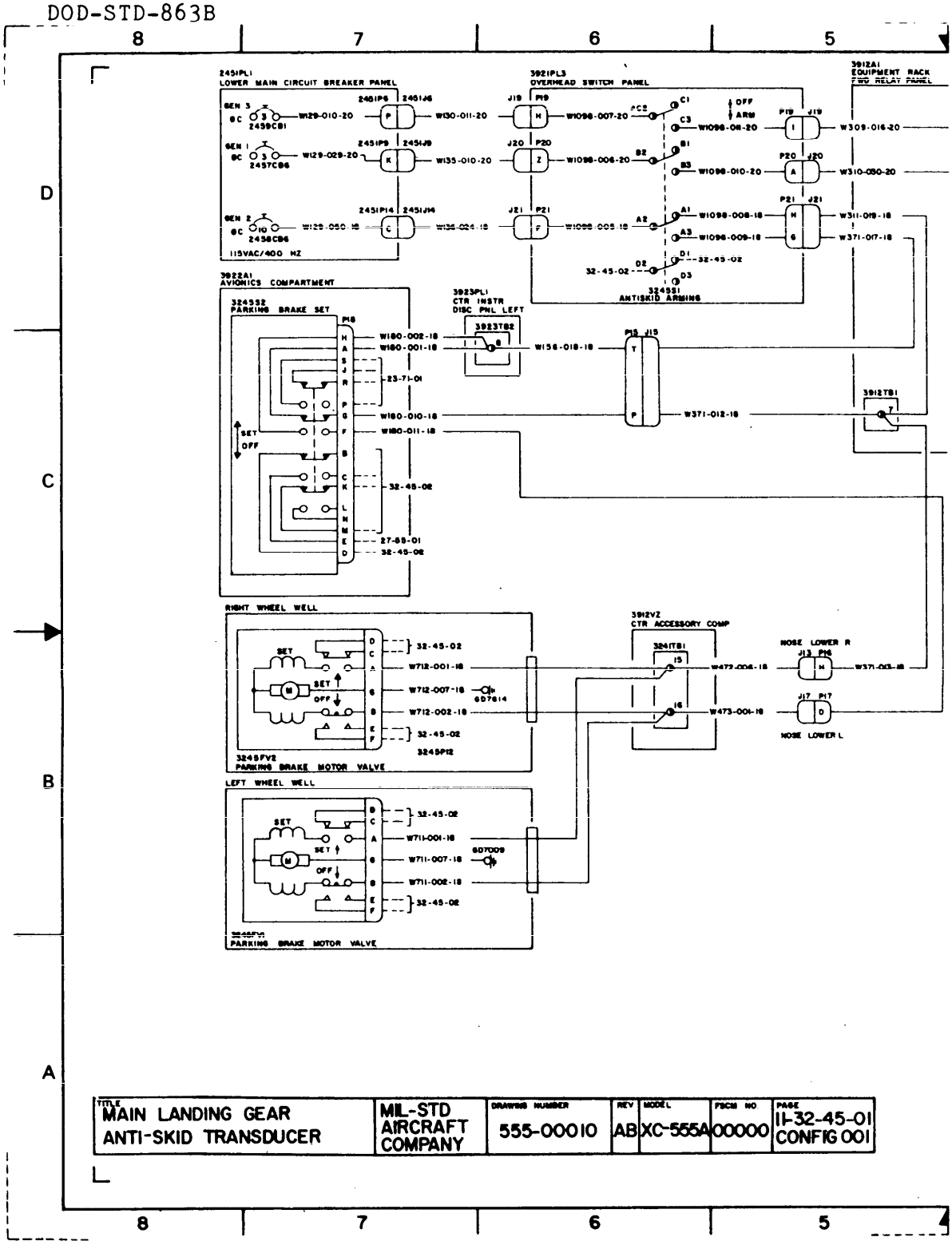

FIGURE 18. POINT TO POINT INTERCONNECT DIAGRAM (SHEET 1 OF 2)

THIS SAMPLE DRAWING IS INFORMATIONAL ONLY AND COMPLETE TO THE DEGREE NECESSARY TO ILLUSTRATE A TYPE OF DRAWING. ACTUAL FORMAT AND DRAWING SHALL CONFORM TO THE TEXTUAL REQUIREMENTS SET FORTH IN THIS STANDARD.

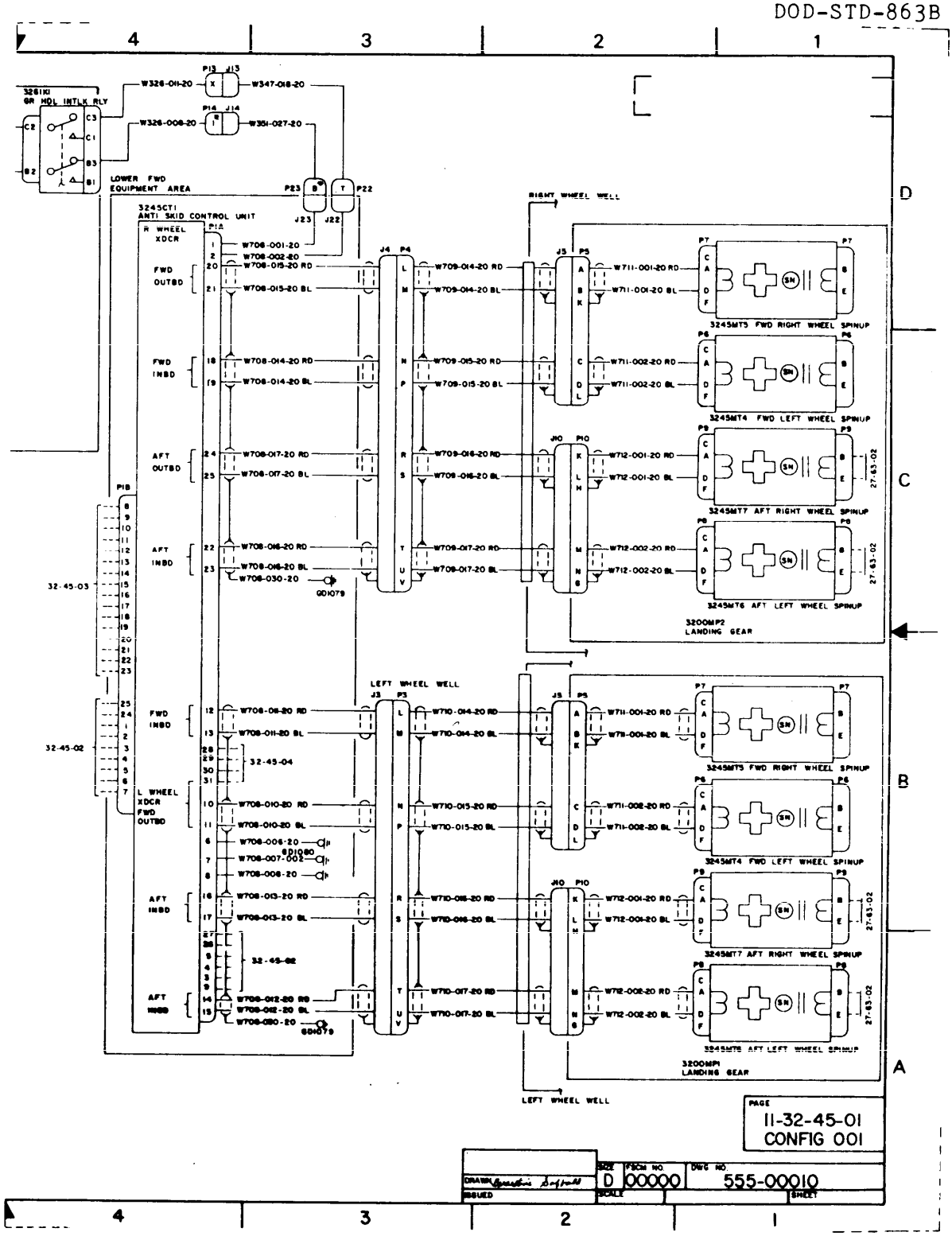

FIGURE 18. POINT TO POINT INTERCONNECT DIAGRAM (SHEET 2 OF 2)

THIS SAMPLE DRAWING IS INFORMATIONAL ONLY AND COMPLETE TO THE DEGREE NECESSARY TO ILLUSTRATE A TYPE OF DRAWING. ACTUAL FORMAT AND DRAWING SHALL CONFORM TO THE TEXTUAL REQUIREMENTS SET FORTH IN THIS STANDARD.

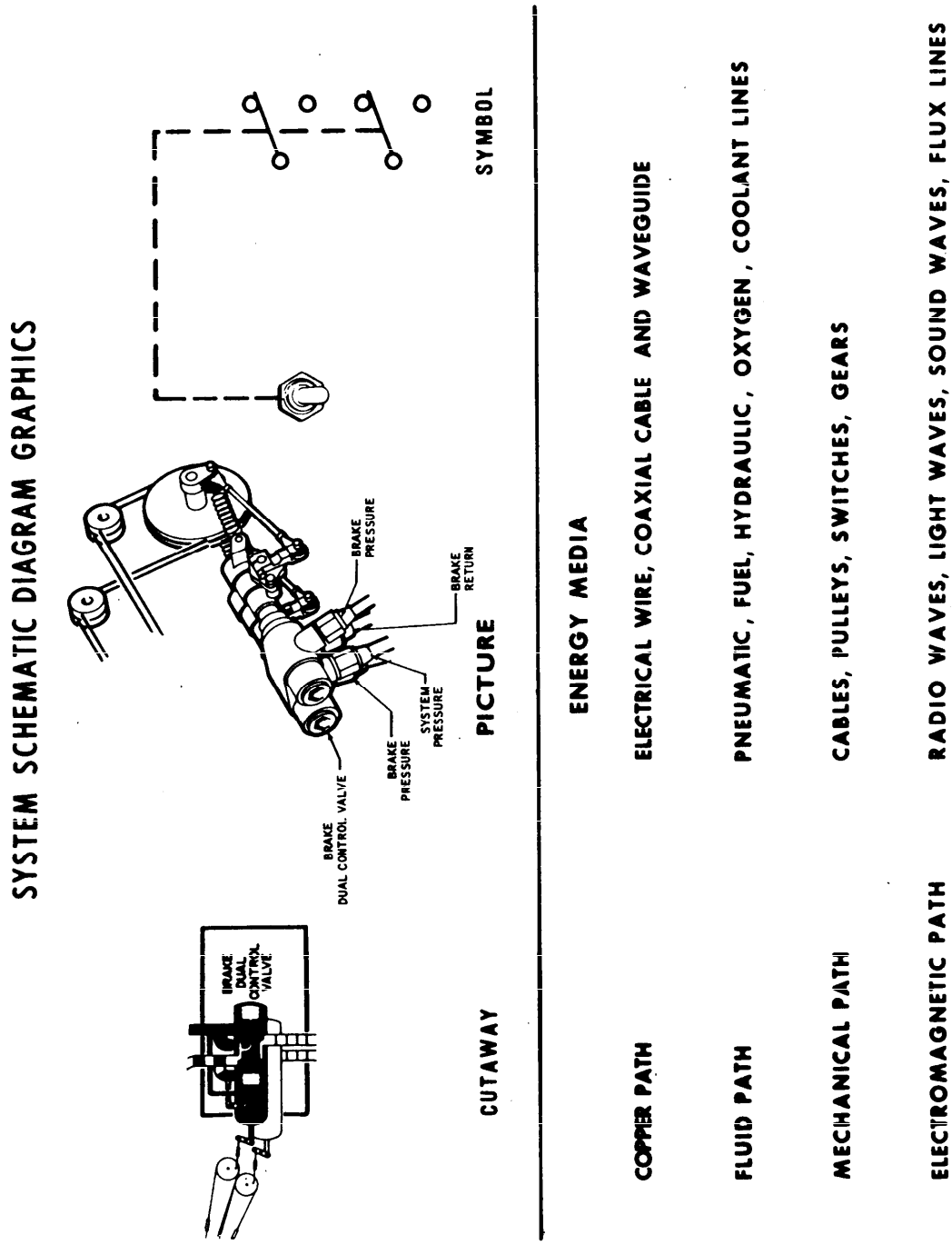

FIGURE 19. SYSTEM SCHEMATIC DIAGRAM GRAPHICS

THIS SAMPLE DRAWING IS INFORMATIONAL ONLY AND COMPLETE TO THE DEGREE NECESSARY TO ILLUSTRATE A TYPE OF DRAWING. ACTUAL FORMAT AND DRAWING SHALL CONFORM TO THE TEXTUAL REQUIREMENTS SET FORTH IN THIS STANDARD.